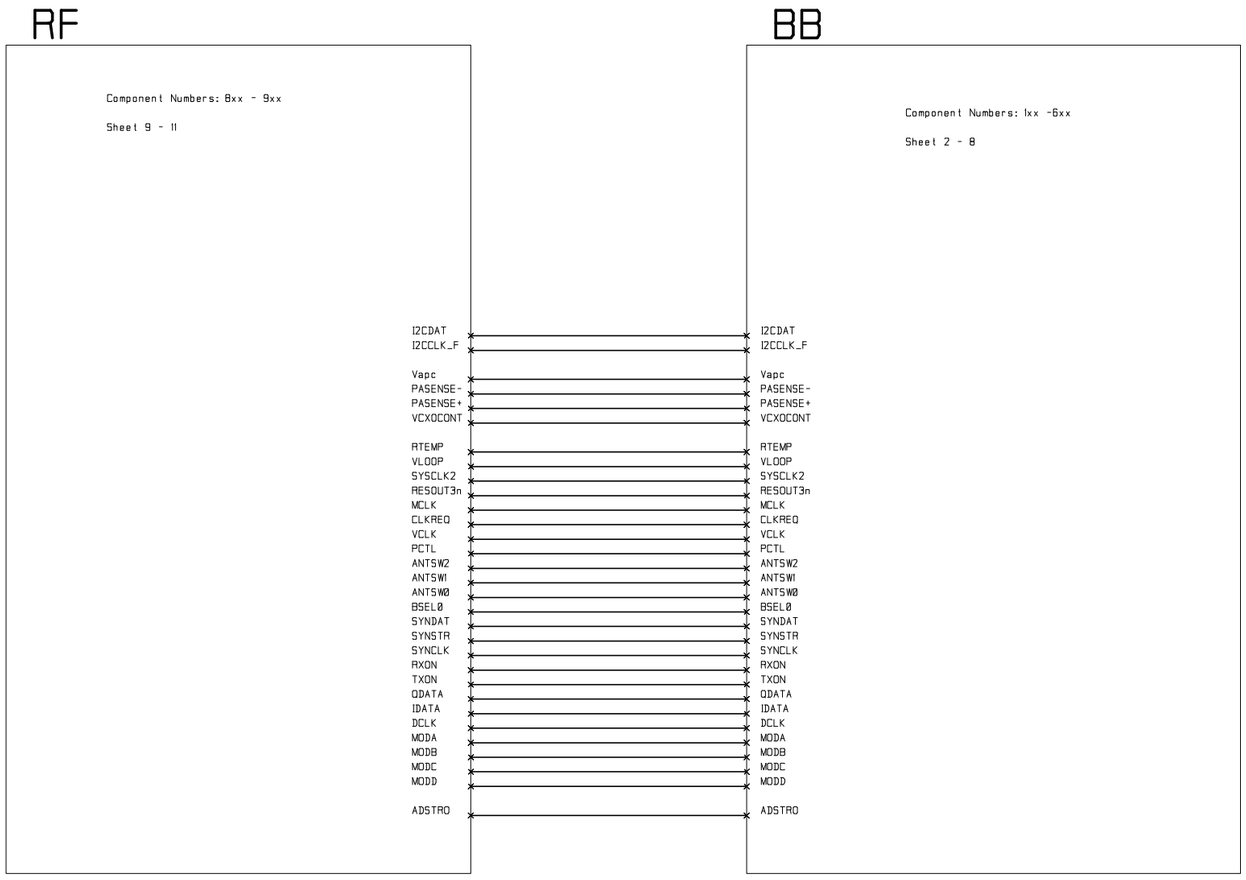

X = NOT ASSEMBLED COMPONENT

			1
			NUMBER

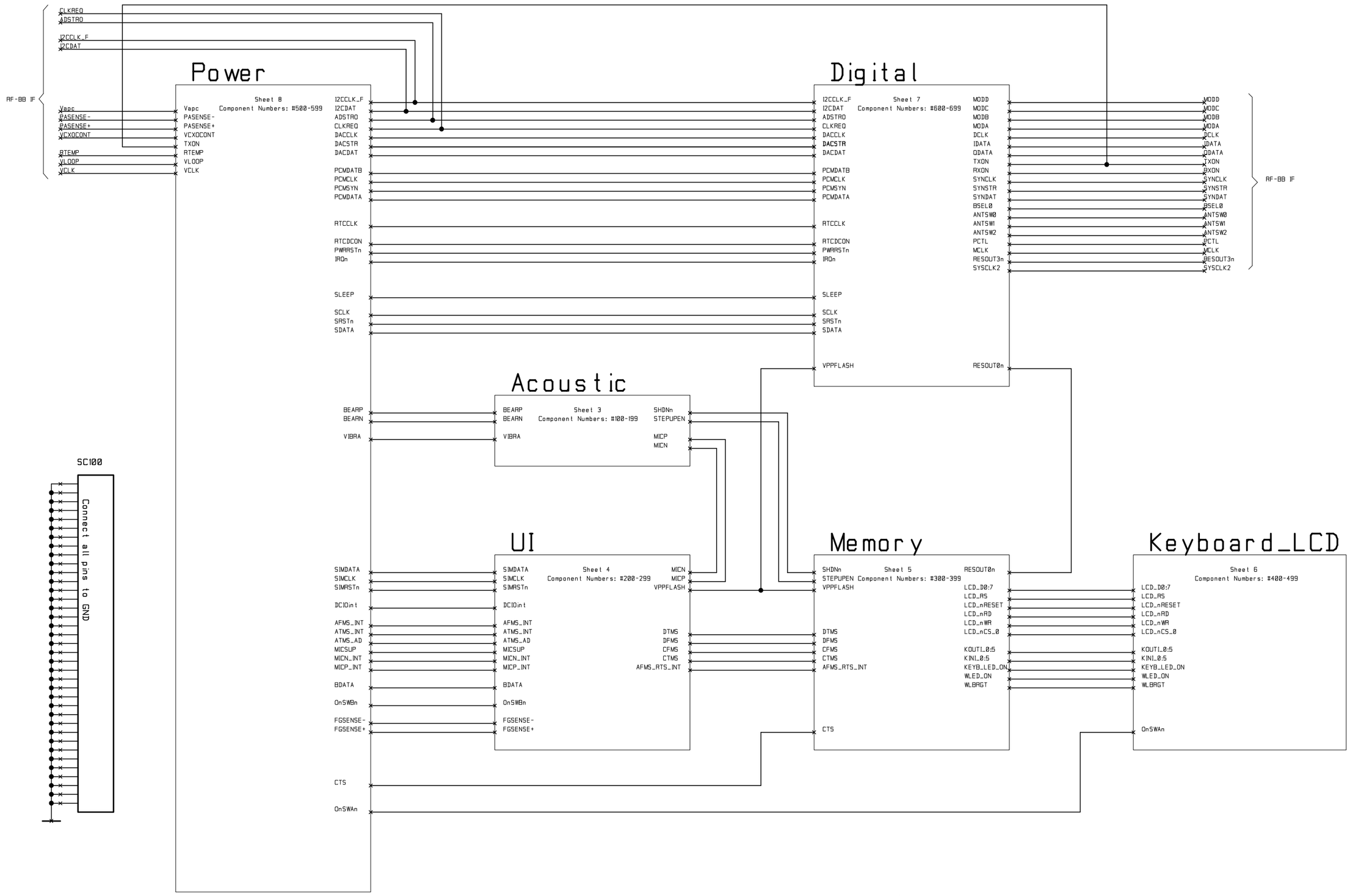

X = NOT ASSEMBLED COMPONENT

			1
			NUMBER

Acoustics

#100-199

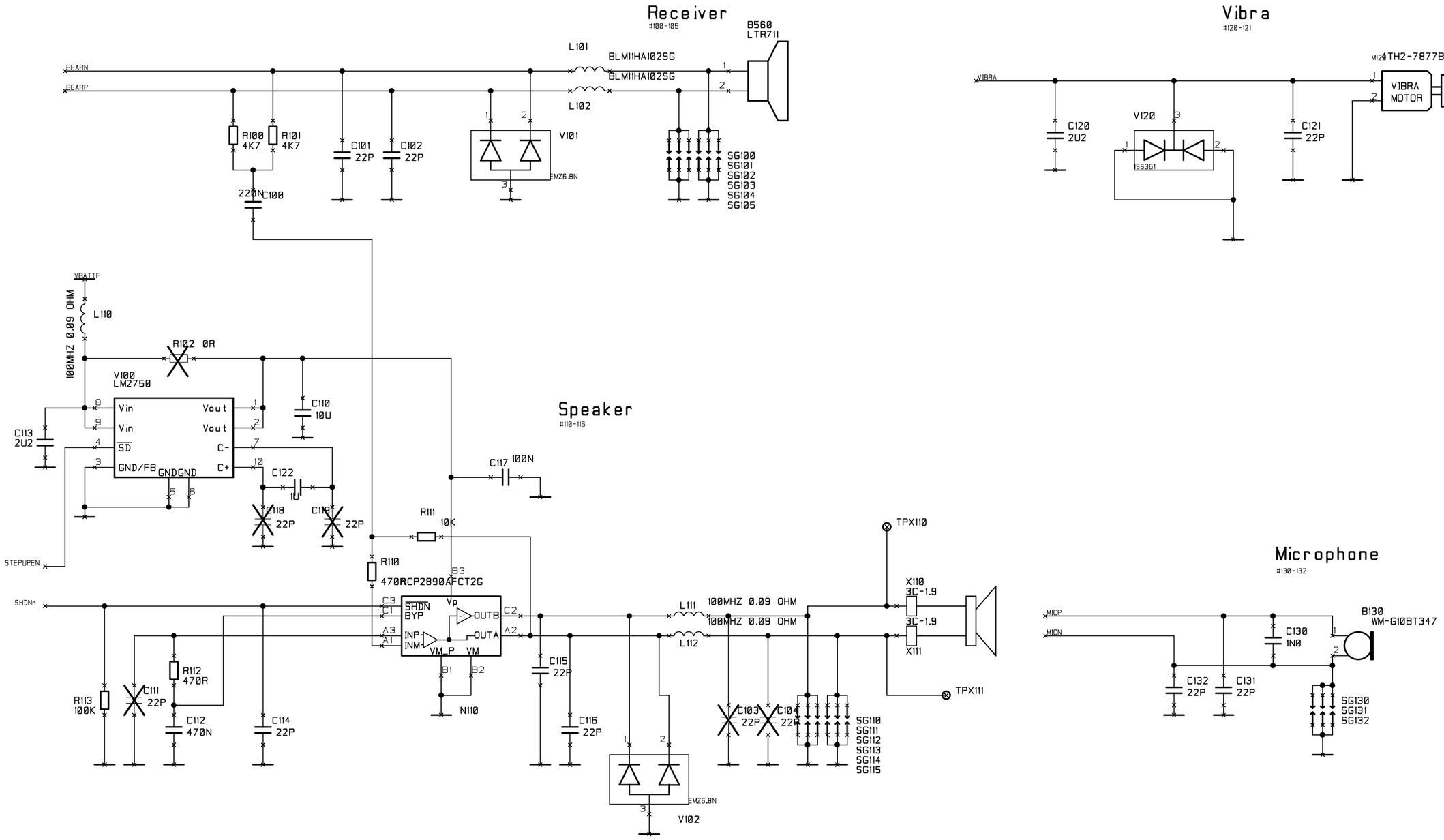

X = NOT ASSEMBLED COMPONENT

		1
		NUMBER

UI Sheet

#200-299

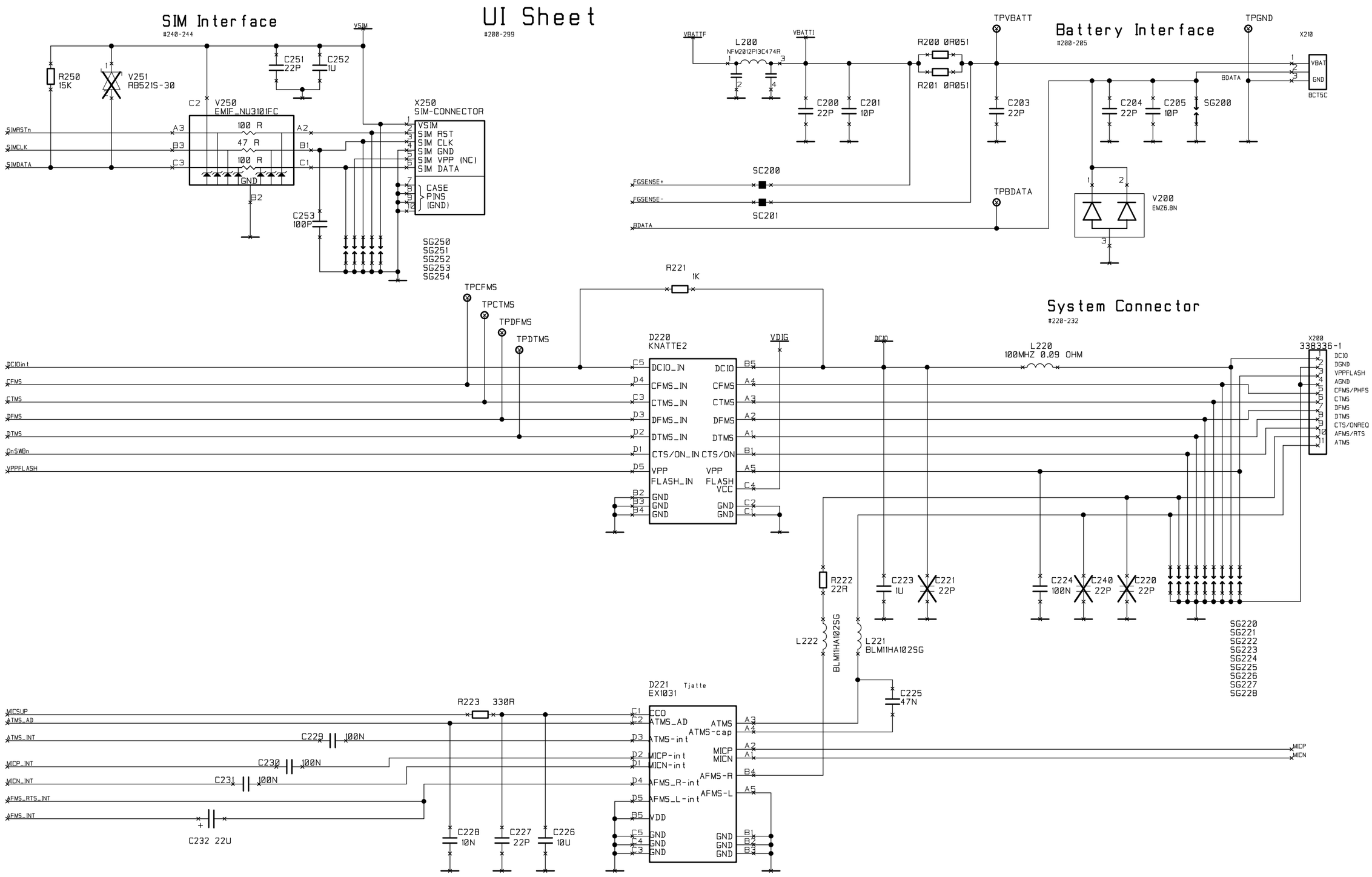

X = NOT ASSEMBLED COMPONENT

			Y
			21
		NUMBER	1

Memory

#300-399

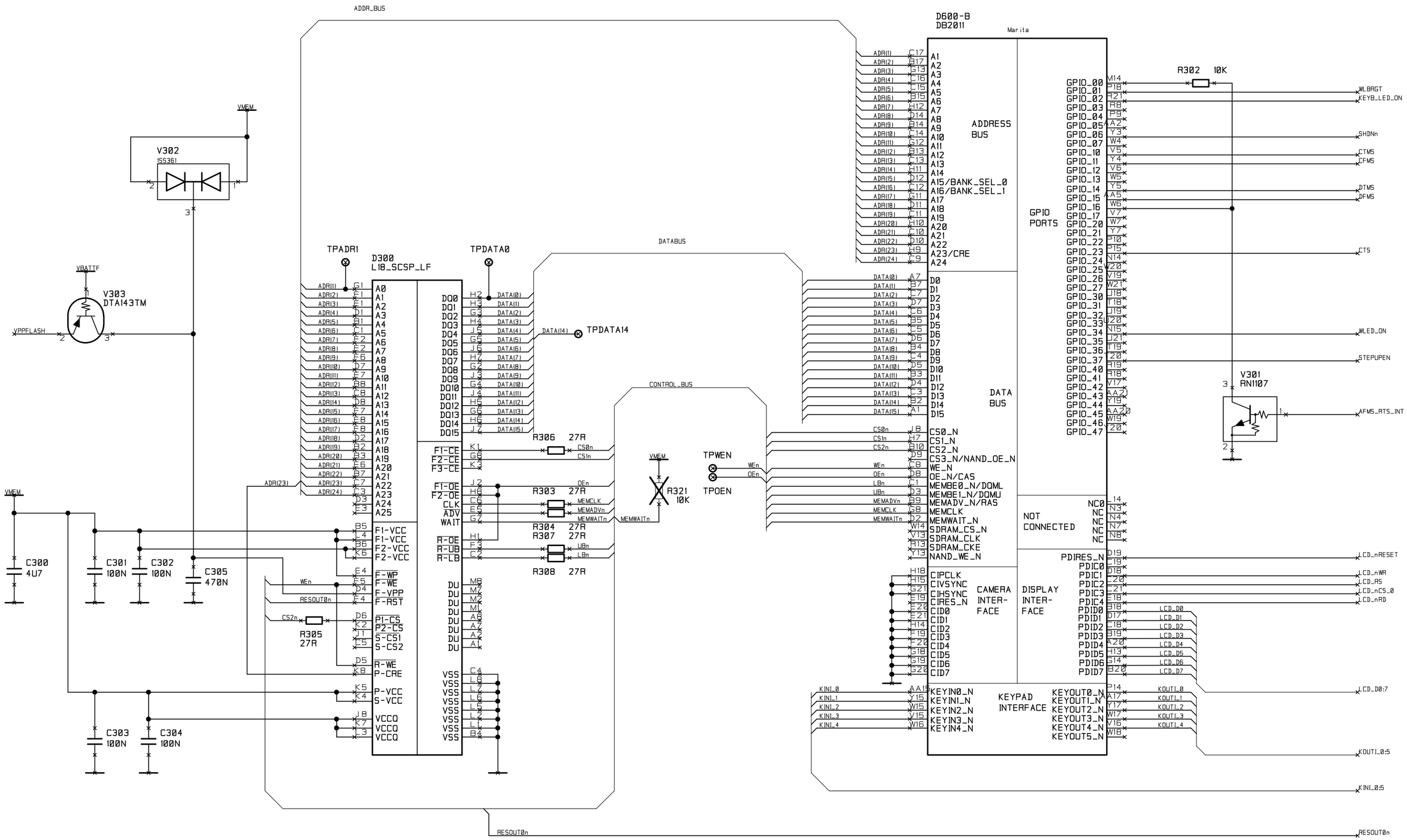

X = NOT ASSEMBLED COMPONENT

		1
	/	NUMBER 1

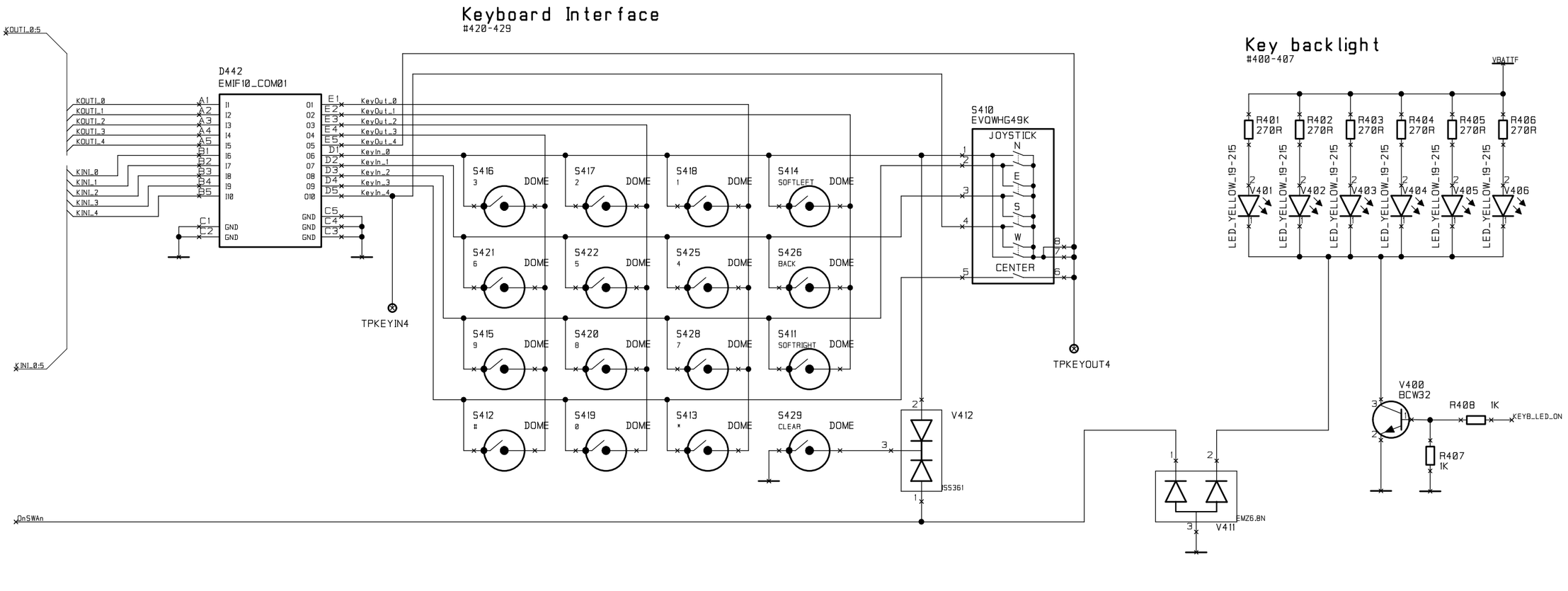
Keyboard Interface
#420-429
D442
EMIF10_COM01
KOUT1_0:5
KOUT1_0
KOUT1_1
KOUT1_2
KOUT1_3
KOUT1_4
KIN1_0
KIN1_1
KIN1_2
KIN1_3
KIN1_4
KIN1_0:5
KeyOut_0
KeyOut_1
KeyOut_2
KeyOut_3
KeyOut_4
KeyIn_0
KeyIn_1
KeyIn_2
KeyIn_3
KeyIn_4
TPKEYIN4
S416 3 DOME
S417 2 DOME
S418 1 DOME
S414 SOFTLEFT DOME
S421 6 DOME
S422 5 DOME
S425 4 DOME
S426 BACK DOME
S415 9 DOME
S420 8 DOME
S428 7 DOME
S411 SOFTRIGHT DOME
S412 # DOME
S419 0 DOME
S413 * DOME
S429 CLEAR DOME
V412
BS361
S410
EVQWHG49K
JOYSTICK
N
E
S
W
CENTER
TPKEYOUT4
OnSWAn
Key backlight
#400-407
VBATTF
R401 270R
R402 270R
R403 270R
R404 270R
R405 270R
R406 270R
LED_YELLOW_19-215
V401
V402
V403
V404
V405
V406
V400
BCW32
R408 1K
KEYB_LED_ON
R407 1K
V411
EMZ6.8N
Display Interface
#440-443
D441
EMIF10_COM01
LCD_nRESET
LCD_RS
LCD_nRD
LCD_nCS_0
LCD_nWR
C444 22P
C445 22P
C446 22P
C447 22P
C448 22P
NOTE!
D440 and D441 must be placed close to D600.
D440
EMIF10_COM01
LCD_D0:7
LCD_D7
LCD_D5
LCD_D3
LCD_D1
LCD_D6
LCD_D4
LCD_D2
LCD_D0
C449 22P
C450 22P
C451 22P
C452 22P
C453 22P
C454 22P
C455 22P
C456 22P
Capacitors C444 to C456 must be placed close to the LCD connector
VDIG
C442 22P
C441 1U
DISPLAY
X440
LCD0_/DISP
LCD0_/CS1
LCD0_RS
LCD0_WR
LCD0_/RD
LCD0_D0
LCD0_D1
LCD0_D2
LCD0_D3
LCD0_D4
LCD0_D5
LCD0_D6
LCD0_D7
White LED Driver
#430-432
V430
S-881300CPE-IPA-TF
LCD0_LED3
LCD0_LED2
LCD0_LED1
IOUT1
IOUT2
IOUT3
ON/OFF
RISET/VISET
CPOUT
VIN
GND
C+
C-
C432 220N
C431 4U7
C430 4U7
R431 100K
R430 5K6
WLED_ON
WLBRGT
Fix the PWM output (WLBRGT) to low level during standby.
Display control levels
/DISP Reset 0
/CS1 Chip select 0
RS Register/data 0/1
/WR Write 0
/RD Read 0
PSX Serial/parallel I/F 1
S80X IF mode (i80) 0
BMOD Bus length (8-bit) 1
X = NOT ASSEMBLED COMPONENT
NUMBER
1

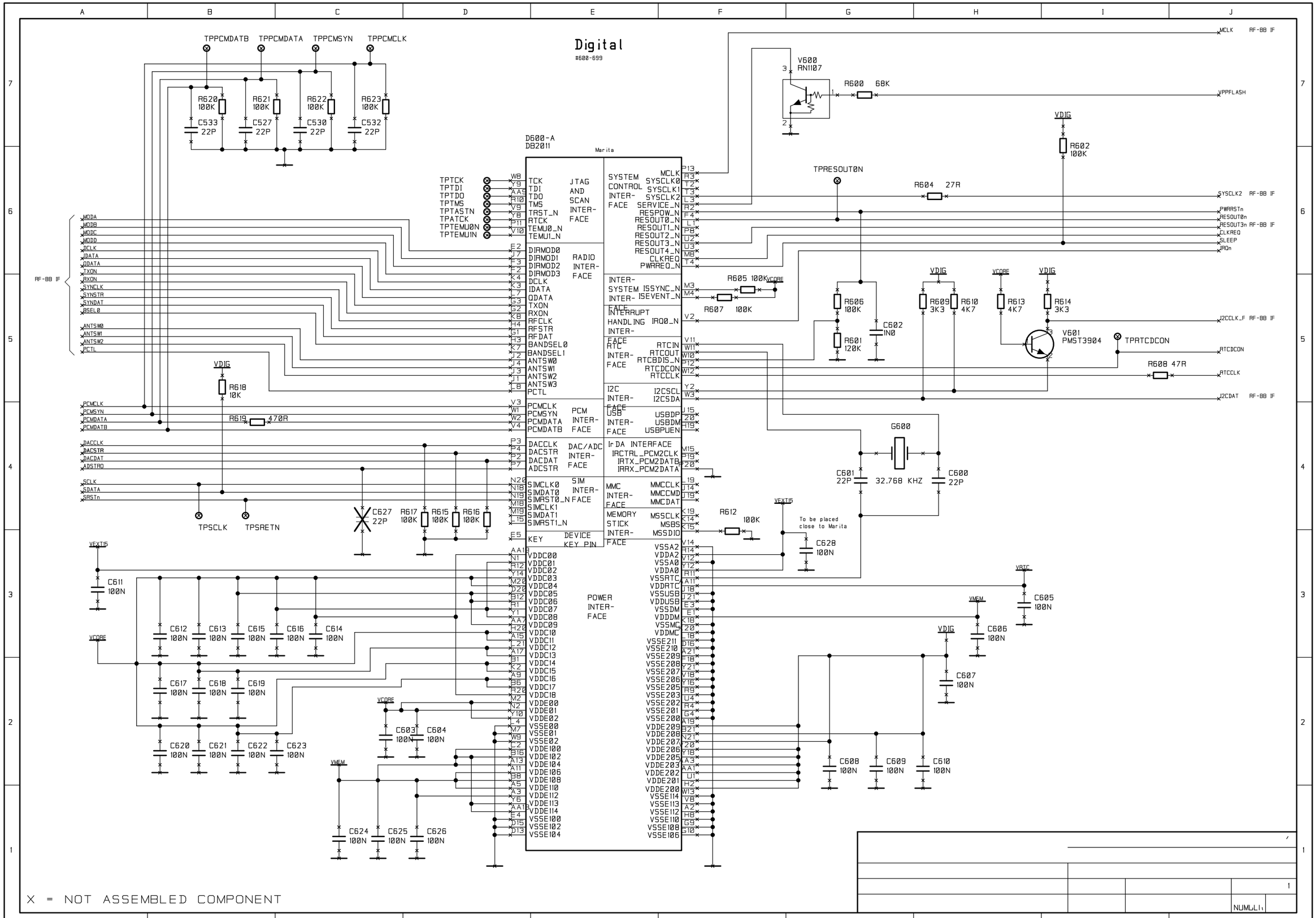
Digital
#600-699
D600-A
DB2011
Marita
TPPCMDATB
TPPCMDATA
TPPCMSYN
TPPCMCLK
R620 100K
R621 100K
R622 100K
R623 100K
C533 22P
C527 22P
C530 22P
C532 22P
TPTCK
TPTDI
TPTDO
TPTMS
TPTASTN
TPATCK
TPTEMU0N
TPTEMU1N
TCK
TDI
TDO
TMS
TRST_N
RTCK
TEMU0_N
TEMU1_N
JTAG AND SCAN INTER-FACE
DIRMOD0
DIRMOD1
DIRMOD2
DIRMOD3
DCLK
IDATA
QDATA
TXON
RXON
RFCLK
RFSTR
RFDAT
BANDSEL0
BANDSEL1
ANTSW0
ANTSW1
ANTSW2
ANTSW3
PCTL
RADIO INTER-FACE
PCMCLK
PCMSYN
PCMDATA
PCMDATB
PCM INTER-FACE
DACCLK
DACSTR
DACDAT
ADCSTR
DAC/ADC INTER-FACE
SIMCLK0
SIMDAT0
SIMRST0_N
SIMCLK1
SIMDAT1
SIMRST1_N
SIM INTER-FACE
KEY
DEVICE KEY PIN
VDDC00
VDDC01
VDDC02
VDDC03
VDDC04
VDDC05
VDDC06
VDDC07
VDDC08
VDDC09
VDDC10
VDDC11
VDDC12
VDDC13
VDDC14
VDDC15
VDDC16
VDDC17
VDDC18
VDDE00
VDDE01
VDDE02
VSSE00
VSSE01
VSSE02
VDDE100
VDDE102
VDDE104
VDDE106
VDDE108
VDDE110
VDDE112
VDDE113
VDDE114
VSSE100
VSSE102
VSSE104
POWER INTER-FACE
SYSTEM CONTROL INTER-FACE
MCLK
SYSCLK0
SYSCLK1
SYSCLK2
SERVICE_N
RESPOW_N
RESOUT0_N
RESOUT1_N
RESOUT2_N
RESOUT3_N
RESOUT4_N
CLKREQ
PWAREQ_N
INTER-SYSTEM INTER-FACE
ISSYNC_N
ISEVENT_N
INTERRUPT HANDLING INTER-FACE
IRQ0_N
RTC INTER-FACE
RTCIN
RTCOUT
RTCBDIS_N
RTCDCON
RTCCLK
I2C INTER-FACE
I2CSCL
I2CSDA
USB INTER-FACE
USBDP
USBDM
USBPUEN
IrDA INTERFACE
IRCTRL_PCM2CLK
IRTX_PCM2DATB
IRRX_PCM2DATA
MMC INTER-FACE
MMCCLK
MMCCMD
MMCDAT
MEMORY STICK INTER-FACE
MSSCLK
MSBS
MSSDIO
VSSA2
VDDA2
VSSA0
VDDA0
VSSRTC
VDDRTC
VSSUSB
VDDUSB
VSSDM
VDDDM
VSSMC
VDDMC
VSSE211
VSSE210
VSSE209
VSSE208
VSSE207
VSSE206
VSSE205
VSSE203
VSSE202
VSSE201
VSSE200
VDDE209
VDDE208
VDDE207
VDDE206
VDDE205
VDDE203
VDDE202
VDDE201
VDDE200
VSSE114
VSSE113
VSSE112
VSSE110
VSSE108
VSSE106
RF-BB IF
MODA
MODB
MODC
MODD
DCLK
IDATA
QDATA
TXON
RXON
SYNCLK
SYNSTR
SYNDAT
BSEL0
ANTSW0
ANTSW1
ANTSW2
PCTL
PCMCLK
PCMSYN
PCMDATA
PCMDATB
DACCLK
DACSTR
DACDAT
ADSTRO
SCLK
SDATA
SRSTn
TPSCLK
TPSRETN
VDIG
R618 10K
R619 470R
C627 22P
R617 100K
R615 100K
R616 100K
VEXTI5
C611 100N
VCORE
C612 100N
C613 100N
C615 100N
C616 100N
C614 100N
C617 100N
C618 100N
C619 100N
C620 100N
C621 100N
C622 100N
C623 100N
C603 100N
C604 100N
VMEM
C624 100N
C625 100N
C626 100N
V600 RN1107
R600 68K
VPPFLASH
MCLK
SYSCLK2
PWRRSTn
RESOUT0n
RESOUT3n
CLKREQ
SLEEP
IRQn
TPRESOUT0N
R604 27R
R605 100K
R607 100K
R606 100K
R601 120K
C602 1N0
R609 3K3
R610 4K7
R613 4K7
R614 3K3
V601 PMST3904
I2CCLK_F
TPRTCDCON
RTCDCON
R608 47R
RTCCLK
I2CDAT
G600
32.768 KHZ
C601 22P
C600 22P
R602 100K
R612 100K
To be placed close to Marita
C628 100N
VRTC
C605 100N
C606 100N
C607 100N
C608 100N
C609 100N
C610 100N
X = NOT ASSEMBLED COMPONENT

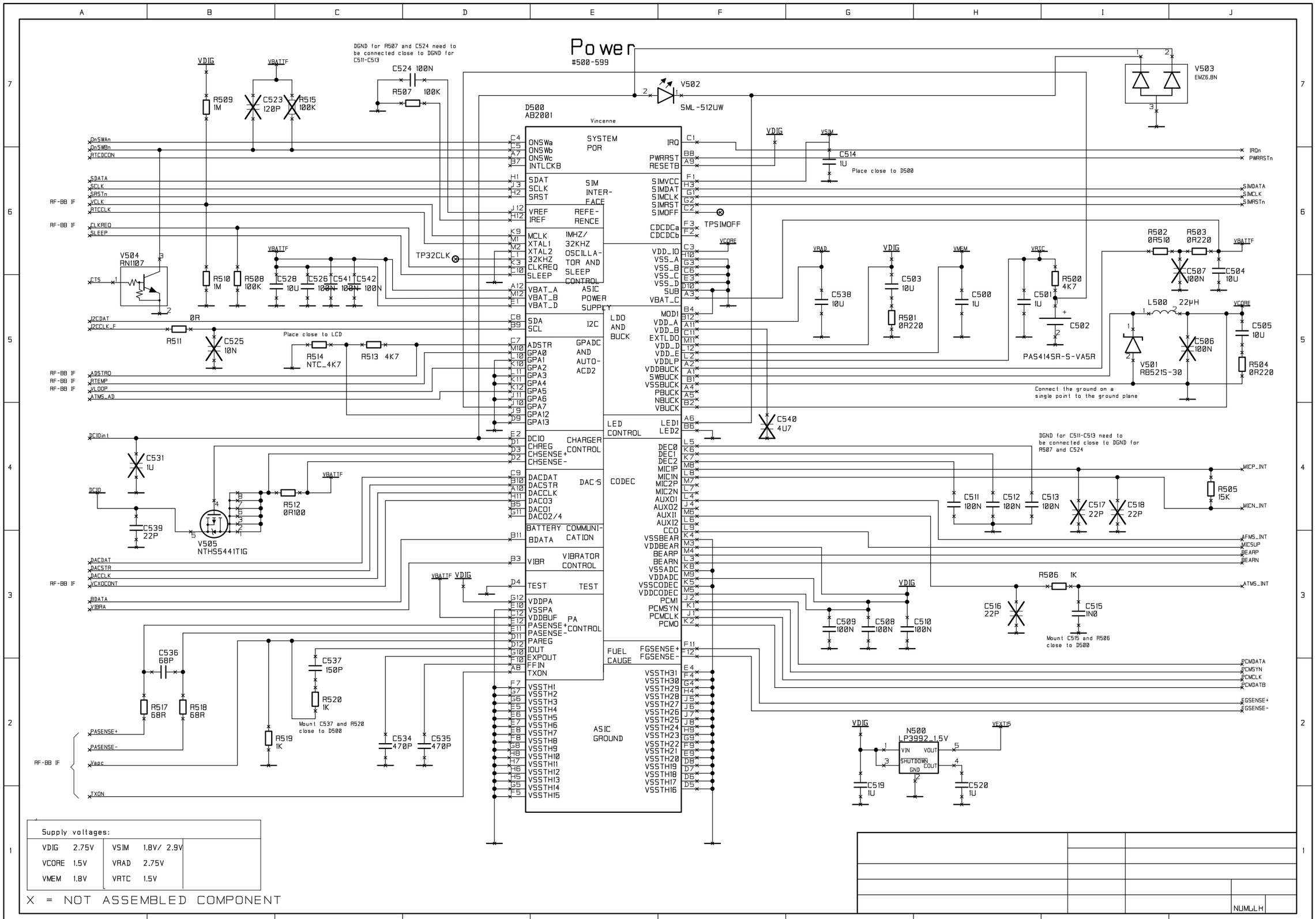
Power
#500-599
D500
AB2001
Vincenne
SYSTEM POR
SIM INTER-FACE
REFE-RENCE
IMHZ/ 32KHZ OSCILLA-TOR AND SLEEP CONTROL
ASIC POWER SUPPLY
I2C
GPADC AND AUTO-ACD2
LDO AND BUCK
LED CONTROL
CHARGER CONTROL
CODEC
DAC'S
BATTERY COMMUNI-CATION
VIBRATOR CONTROL
TEST
PA CONTROL
FUEL CAUGE
ASIC GROUND
V502
SML-512UW
V503
EMZ6.8N
V504
RN1107
V505
NTH5441T1G
V501
RB521S-30
N500
LP3992_1.5V
PAS414SR-S-VA5R
DGND for R507 and C524 need to be connected close to DGND for C511-C513
Place close to D500
Place close to LCD
Connect the ground on a single point to the ground plane
Mount C537 and R520 close to D500
Mount C515 and R506 close to D500
TP32CLK
TPSIMOFF
RF-BB IF
Supply voltages:
VDIG 2.75V
VSIM 1.8V/ 2.9V
VCORE 1.5V
VRAD 2.75V
VMEM 1.8V
VRTC 1.5V
X = NOT ASSEMBLED COMPONENT
NUMLLH

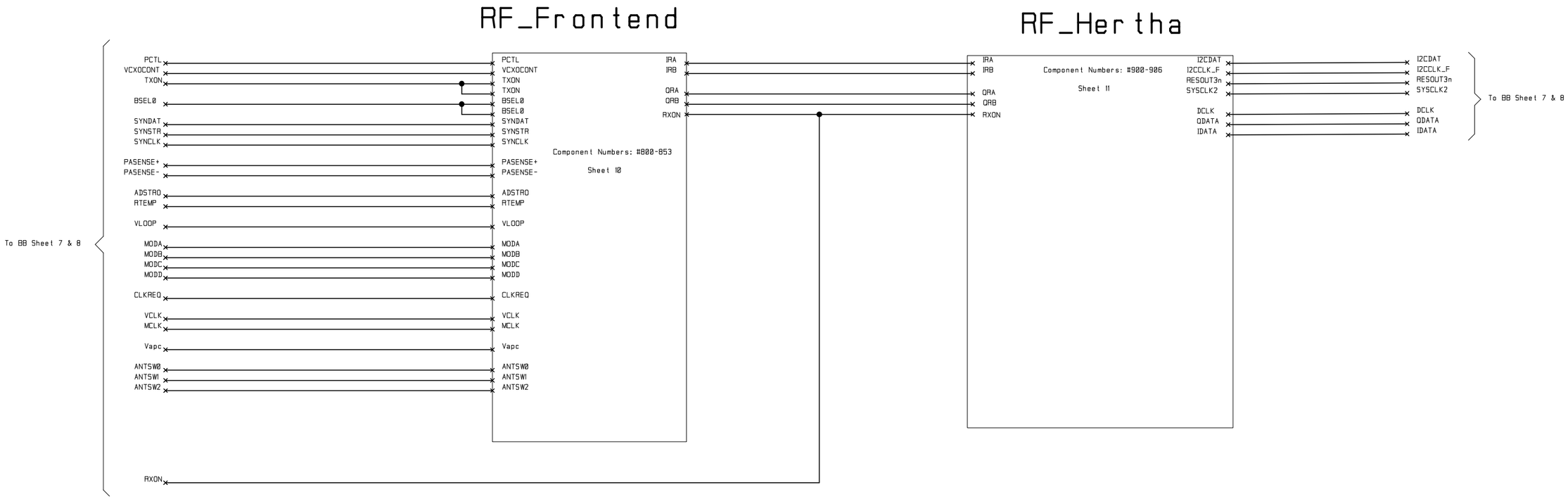

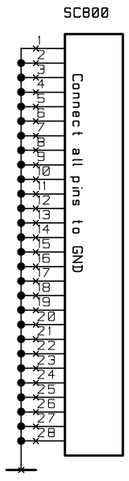

X = NOT ASSEMBLED COMPONENT

Dualband. Version : E-GSM900/DCS1800.

RF_FRONTEND

#800-899

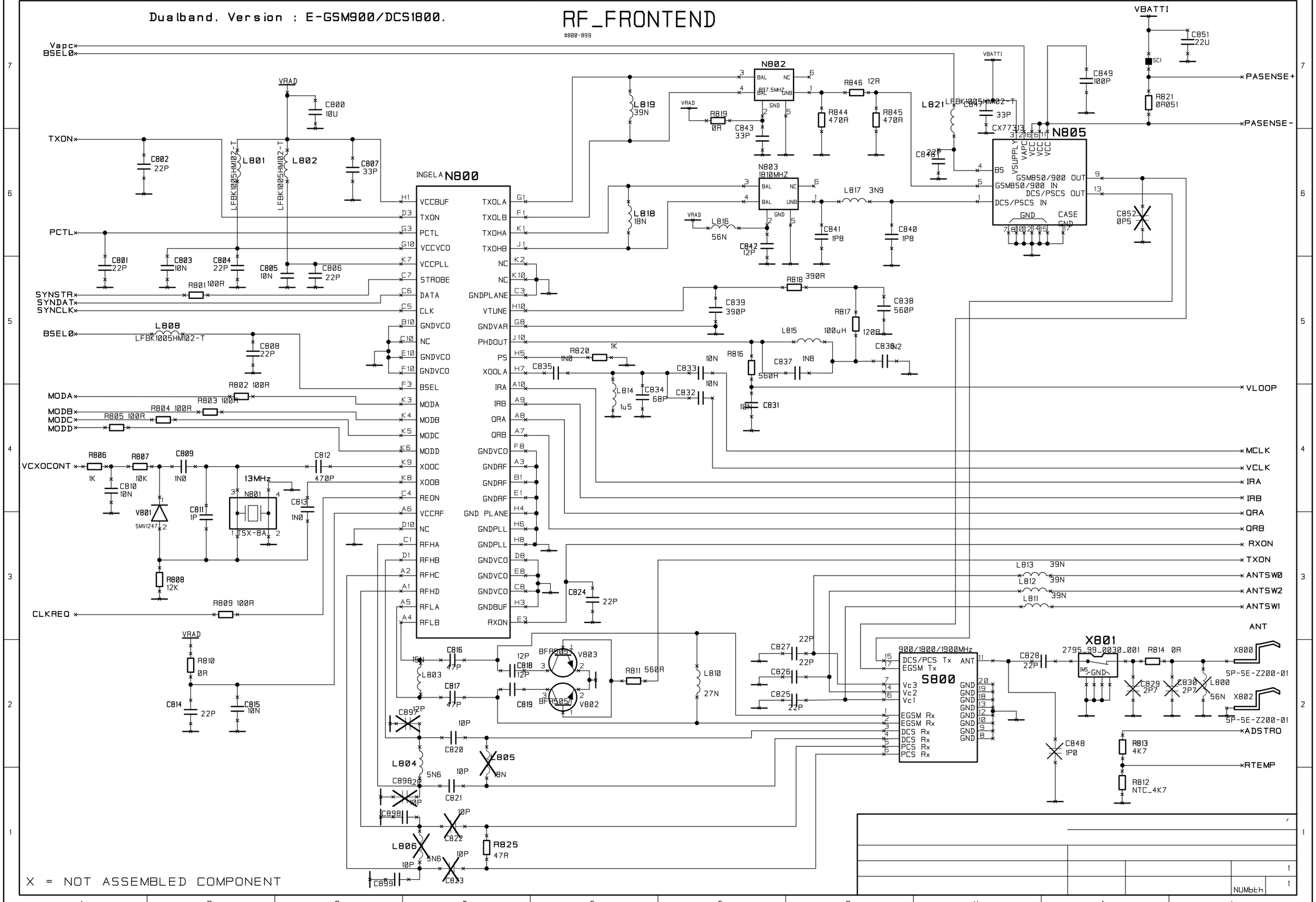

RF_HERTA

#900-999

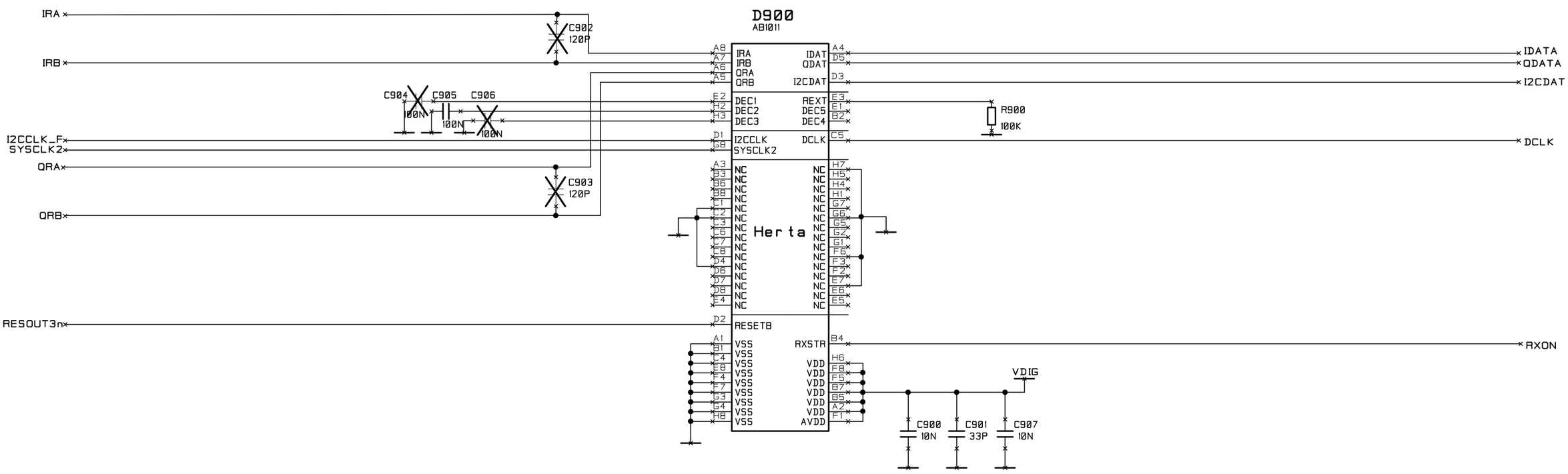

X = NOT ASSEMBLED COMPONENT

			1
			NUMBER